AH BENT SHANK TAP

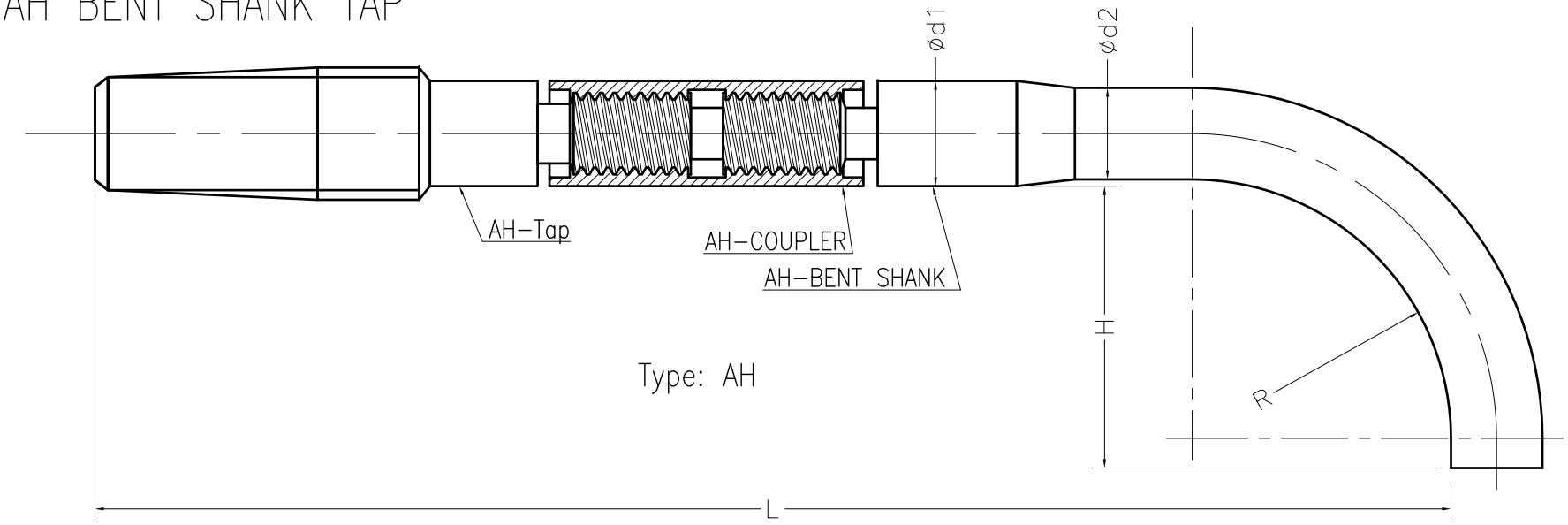

Type: AH

Tap Size	FLUTES	L	Ød1	Ød2	H	R	Machine

Description :

Dwg. No.

Date:

Nut Tapping Machine :

.....

sctools
www.sctools.net

File Name: nutTapAHwBentShank0805A.dwg